ASSISTED SERVICE CHILLED PATISSERIE (REAR DOORS) - R290 WITH AIRFLOW KIT PAF2 (IN/OUT TO OPERATOR SIDE) - FITTING INSTRUCTIONS

DESIGN LINE chilled by hydrocarbon

General Installation Considerations

1) Area in which display is to be sited must have a minimum room floor area no less than 17 sq m (PC6&9ASHTD), 21 sq m (PC12ASHTD) or 29 sq m (PC15&18ASHTD).
2) Install over a sealed floor or ventilated floor void.
3) Do not site the display within 2m of ceiling mounted air conditioning grilles.
4) Do not site the display beneath a high level of direct sunlight.
5) Display will operate in a 24 hour environment.
6) Access to maintain condensing unit should be made via removable fascia panels or doors to customer and operator side of counter.

A) WORKTOP CUT-OUT

Model Ref.	Worktop Cut Out Size (mm)		Model Weight
	Length	Width	(in Kg)
PC6ASHTD+PAF2	570	740	149
PC9ASHTD+PAF2	870	740	196
PC12ASHTD+PAF2	1170	740	248
PC15ASHTD+PAF2	1470	740	303
PC18ASHTD+PAF2	1770	740	354

FIX LIFTING BRACKETS TO FRAME END FLANGES USING SCREWS ALREADY IN FLANGES, THEN LOCATE LIFTING BARS INTO SQUARE HOLES.

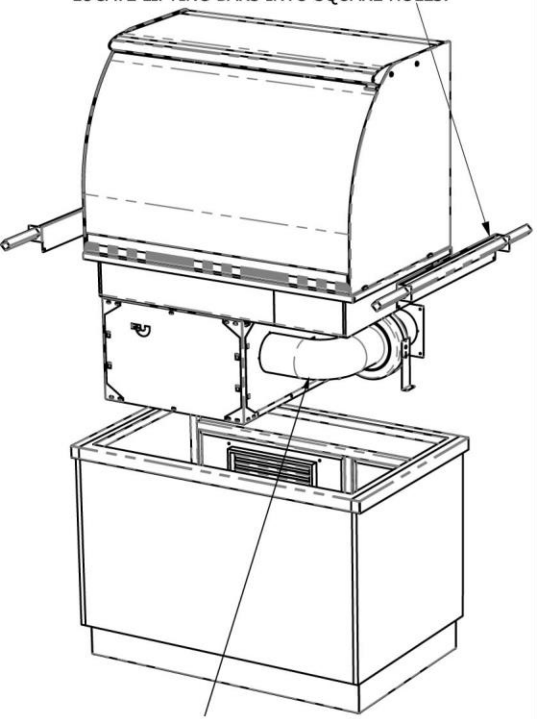

FLEXIBLE DUCTING & IN-LINE FAN SUPPLIED LOOSE. RE-ATTACH FLEXIBLE DUCTING & IN-LINE FAN TO SIDE OF COMPRESSOR CRADLE ONCE UNIT HAS BEEN DROPPED INTO PLACE. ELECTRICALY CONNECT FAN TO CONTROL BOX WITH "KETTLE PLUG"

FRONT ISOMETRIC
(CUSTOMER SIDE)

B) AIR INTAKE & OUTLET CUT-OUTS
(OPERATOR SIDE FASCIA PANEL)

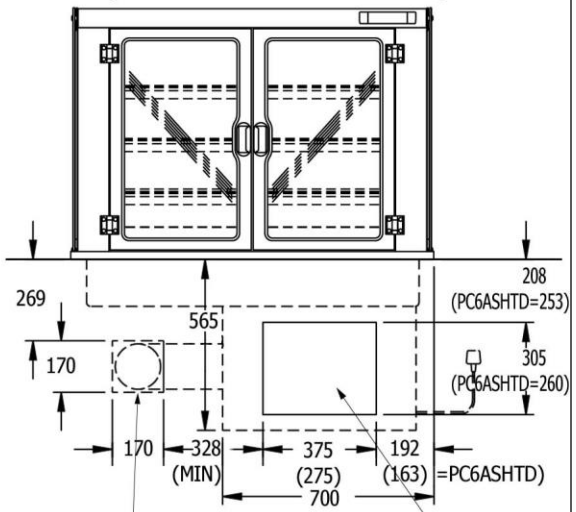

CUT-OUT FOR AIR OUTLET GRILLE IN REAR FASCIA

REAR VIEW
(OPERATOR SIDE)

CUT-OUT FOR AIR INTAKE GRILLE IN REAR FASCIA

E) AIR INTAKE TUNNEL / PLENUM FITTING
(OPERATOR SIDE FASCIA PANEL)

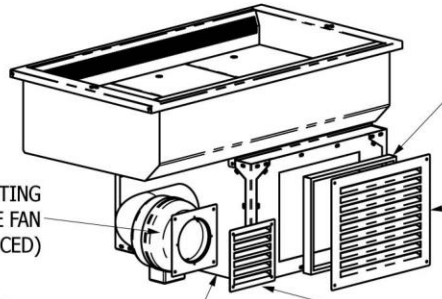

PLENUM OR 4 SIDED DUCT (BY OTHERS)

REAR FASCIA PANEL OMITTED FOR CLARITY

FLEXIBLE DUCTING & IN-LINE FAN (SUPPLIED BY CED)

STD ST/STL AIR GRILLE (SUPPLIED BY CED)

REAR ISOMETRIC
(OPERATOR SIDE)

COMPRESSOR CRADLE

A PLENUM OR 4 SIDED TUNNEL (MADE FROM MDF, PLYWOOD OR NILFLAM TYPE MATERIAL) MUST BE FITTED BETWEEN THE REAR FACE OF THE OPERATOR SIDE FASCIA PANEL AND THE FRONT FACE OF THE COMPRESSOR CRADLE, AROUND THE AIR INTAKE CUT-OUT, TO STOP THE RE-CIRCULATION OF HOT AIR FROM THE COMPRESSOR. SILICON SEAL AROUND EDGES TO ENSURE THERE ARE NO AIR GAPS.

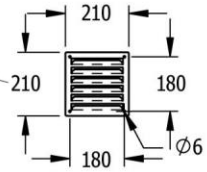

STAINLESS STEEL AIR FLOW KIT LOUVRE GRILLE (1 SUPPLIED WITH KIT)

C) FITTING INTO COUNTER WORKTOP

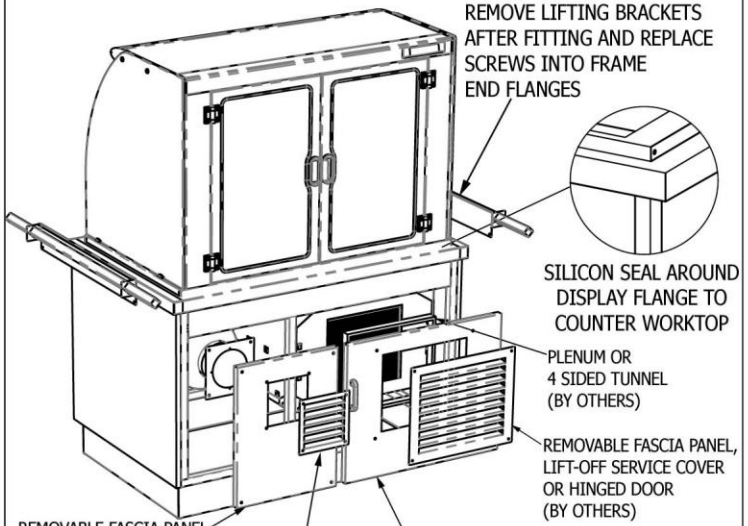

REMOVE LIFTING BRACKETS AFTER FITTING AND REPLACE SCREWS INTO FRAME END FLANGES

SILICON SEAL AROUND DISPLAY FLANGE TO COUNTER WORKTOP

PLENUM OR 4 SIDED TUNNEL (BY OTHERS)

REMOVABLE FASCIA PANEL, LIFT-OFF SERVICE COVER OR HINGED DOOR (BY OTHERS)

REMOVABLE FASCIA PANEL, LIFT-OFF SERVICE COVER OR HINGED DOOR (BY OTHERS)

STAINLESS STEEL AIR FLOW KIT GRILLE (SUPPLIED BY CED)

STANDARD STAINLESS STEEL AIR GRILLE (SUPPLIED BY CED)

REAR ISOMETRIC
(OPERATOR SIDE)

D) FITTING SHELVES

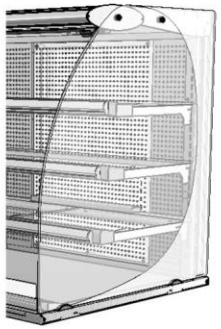

LOCATE SHELF SUPPORT BRACKETS INTO REAR SLOTS AT HEIGHT & ANGLE TO SUIT PRODUCTS (NOTE: 2 No. BRACKETS WITH GLASS STOPS TO BE FITTED AT BTM.). PUSH ON 3 x GREY SILICON SHELF RESTS ONTO EACH BRACKET BEFORE GLASS SHELVES ARE LOWERED ON (NOTE: 1 No. SHORT SHELF TO BE FITTED AT BTM.)

F) FITTING OF LOUVRE GRILLES

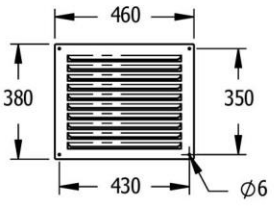

STANDARD STAINLESS STEEL FASCIA LOUVRE (1 SUPPLIED WITH UNIT)

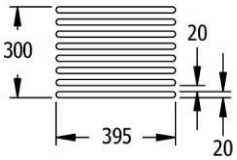

ALTERNATIVE FASCIA PANEL ROUTING

CED
CATERING EQUIPMENT DESIGN

Tel. 01254 238 282 Fax. 01254 238 228
e-mail: aftersales@cedlimited.com