ASSISTED SERVICE CHILLED DELI - R290 WITH AIRFLOW KIT AF1 (IN/OUT TO CUSTOMER SIDE) - FITTING INSTRUCTIONS

cabinet Kubus chilled by hydrocarbon

General Installation Considerations

1) Area in which display is to be sited must have a minimum room volume no less than 66 cu m (KCDL2HT), 82 cu m (KCDL3HT), 95 cu m (KCDL4HT) or 122 cu m (KCDL5HT & KCLD6HT).
2) Install over a sealed floor or ventilated floor void.
3) Do not site the display within 2m of ceiling mounted air conditioning grilles.
4) Do not site the display beneath a high level of direct sunlight.
5) Display will operate in a 24 hour environment.
6) Access to maintain condensing unit should be made via removable fascia panels or doors to customer and operator side of counter.

A) WORKTOP CUT-OUT

Model Ref.	Worktop Cut Out Size (mm)		Model Weight
	Length	Width	(in Kg)
KCDL2HT + AF1	795	650	116
KCDL3HT + AF1	1145	650	138
KCDL4HT + AF1	1495	650	166
KCDL5HT + AF1	1845	650	185
KCDL6HT + AF1	2195	650	204

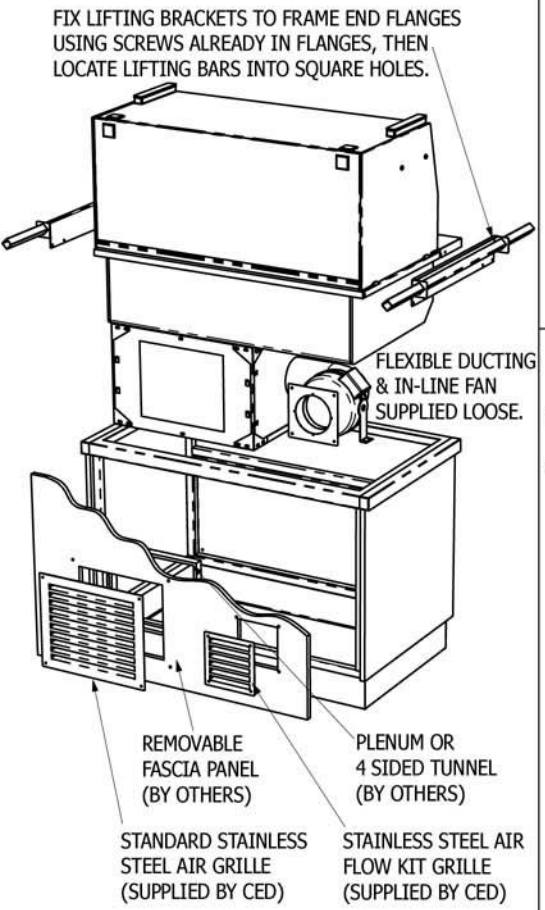

FRONT ISOMETRIC
(CUSTOMER SIDE)

B) AIR INTAKE & OUTLET CUT-OUTS

(CUSTOMER SIDE FASCIA PANEL)

(FOR KCDL2HT - KCDL6HT)

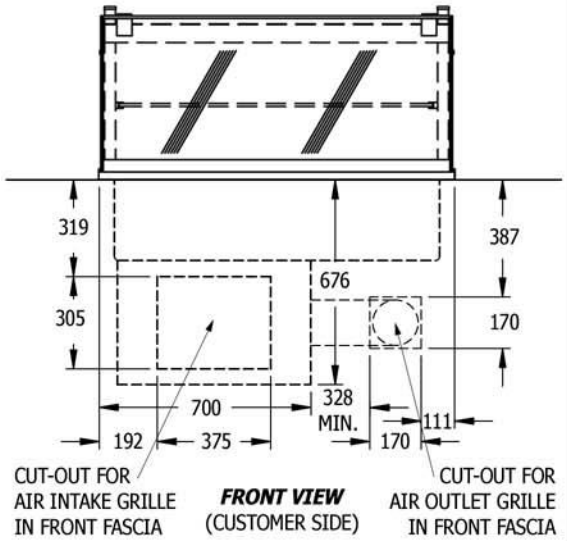

FRONT VIEW
(CUSTOMER SIDE)

C) FITTING INTO COUNTER WORKTOP

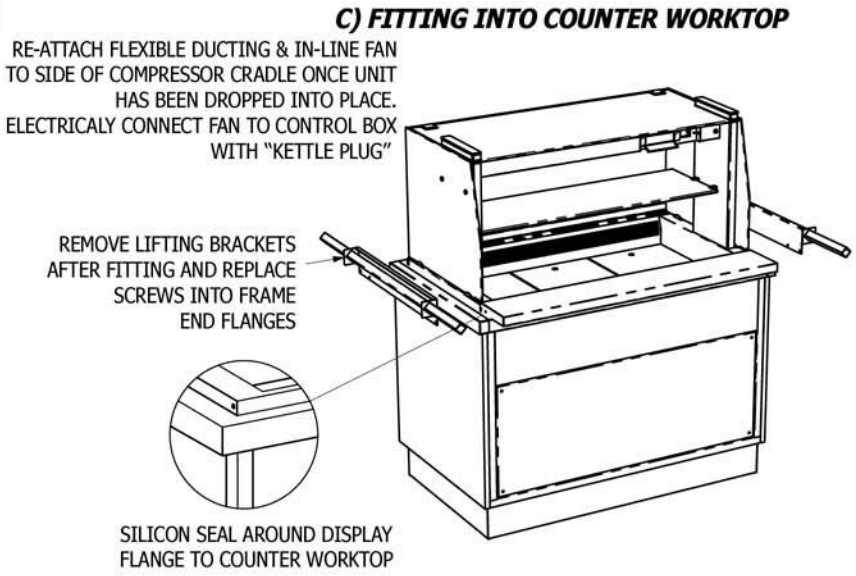

REAR ISOMETRIC
(OPERATOR SIDE)

D) AIR INTAKE TUNNEL / PLENUM FITTING

(CUSTOMER SIDE FASCIA PANEL)

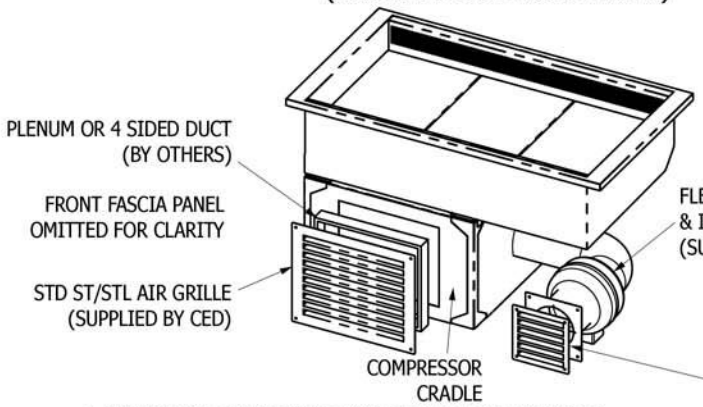

FRONT ISOMETRIC
(CUSTOMER SIDE)

A PLENUM OR 4 SIDED TUNNEL (MADE FROM MDF, PLYWOOD OR NILFLAM TYPE MATERIAL) MUST BE FITTED BETWEEN THE REAR FACE OF THE CUSTOMER SIDE FASCIA PANEL AND THE FRONT FACE OF THE COMPRESSOR CRADLE, AROUND THE AIR INTAKE CUT-OUT, TO STOP THE RE-CIRCULATION OF HOT AIR FROM THE COMPRESSOR. SILICON SEAL AROUND EDGES TO ENSURE THERE ARE NO AIR GAPS.

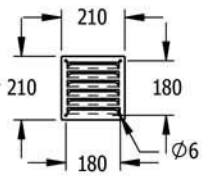

STAINLESS STEEL AIR FLOW KIT LOUVRE GRILLE (1 SUPPLIED WITH KIT)

E) FITTING OF LOUVRE GRILLES

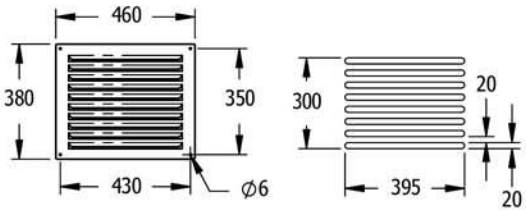

STANDARD STAINLESS STEEL FASCIA LOUVRE (1 SUPPLIED WITH UNIT)

ALTERNATIVE FASCIA PANEL ROUTING

CED
CATERING EQUIPMENT DESIGN

Tel. 01254 238 282 Fax. 01254 238 228
e-mail: aftersales@cedlimited.com